REV.	ECN NO	DESCRIPTION	REVISED	DATE
A		新订图面	KEVIN	2015.03.10

ROHS

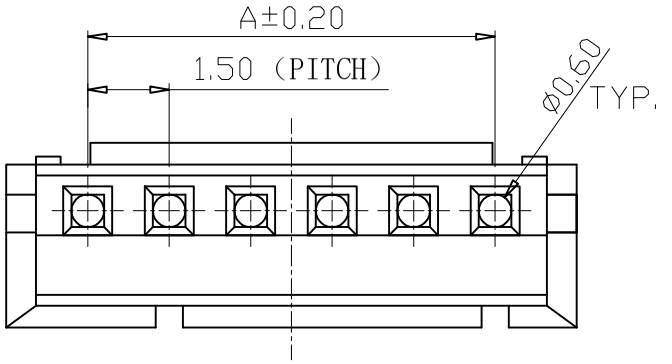

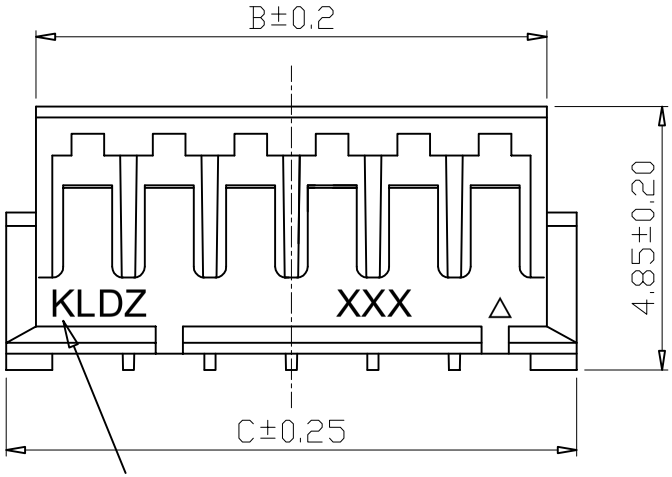

商标KL或KLDZ
具体以实物为准

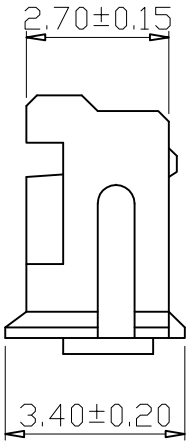

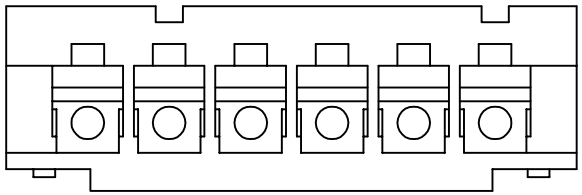

Specifications/技术规格:

Current rating: 1A
额定电流: 1A

Voltage rating: 50V AC,DC
额定电压: 50V AC,DC

Insulation Resistance: 500MΩ Min.
绝缘电阻: 最小500MΩ

Withstanding Voltage: 500V AC 1Min
耐电压: 500V AC 1分钟

Contact Resistance: 20mΩ Max.
接触电阻: 最大20mΩ

Operating Temperature:-25°C to +85°C
工作温度: -25° C 到85° C

Materials/材料:

Insulation Material: PA or PBT UL94V-0 Natural
绝缘体塑胶材质: PA 或 PBT UL94 V-0 本色

孔位	尺寸 (mm)		
	A	B	C
2	1.5	3.4	4.5
3	3.0	4.9	6.0
4	4.5	6.4	7.5
5	6.0	7.9	9.0
6	7.5	9.4	10.5
7	9.0	10.9	12.0
8	10.5	12.4	13.5
9	12.0	13.9	15.0
10	13.5	15.4	16.5
11	15.0	16.9	18.0
12	16.5	18.4	19.5
13	18.0	19.9	21.0
14	19.5	21.4	22.5
15	21.0	22.9	24.0
16	22.5	24.4	25.5

浙江快利电子有限公司
Zhejiang Kuaili Electronic Co., Ltd

REV.	UNIT.	SCALE.
A	MM	1:1

GENERAL TOLERANCE	
X.° ± 3°	.XXX: ± 0.10
.X° ± 2°	.XX : ± 0.15
.XX° ± 1°	.X : ± 0.25
.XXX° ± 0.5°	X. : ± 0.35

DESIGN:	KEVIN	DATE:2015-03-10
CHECKED:	朱前程	DATE:2015-03-10
AUDITED:		DATE:
APPROVED:	张宁	DATE:2015-03-10

DWG. NO.

PART NO. KL-ZH-NY

TITLE. ZH-NY