ROHS

REV.	ECN NO	DESCRIPTION	REVISED	DATE
A		新订图面	HELLER	

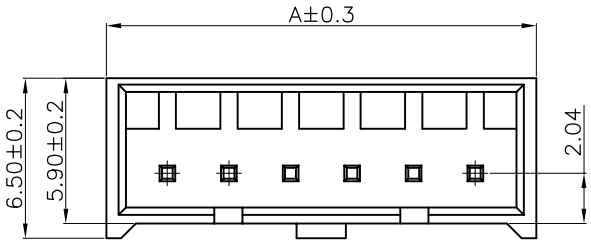

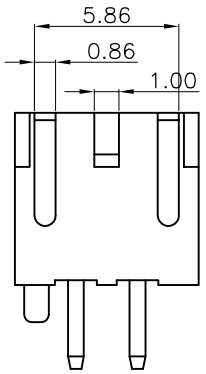

2、3PIN

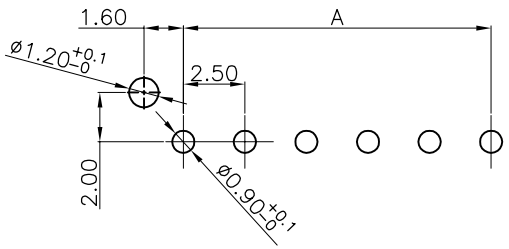

Recommended P.C.Board Hole Layout

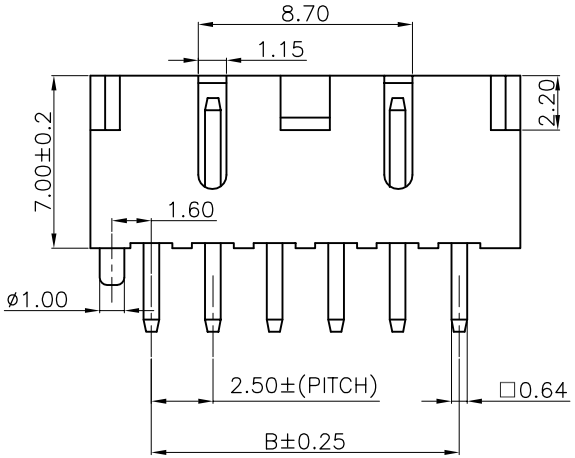

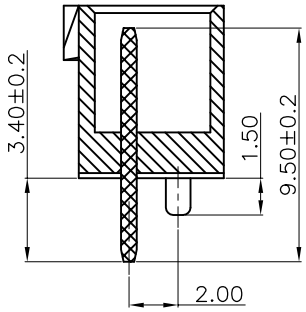

CKT	A	B
2	7.46	2.50
3	9.96	5.00
4	12.46	7.50
5	14.96	10.00
6	17.46	12.50
7	19.96	15.00
8	22.46	17.50
9	24.96	20.00
10	27.46	22.50
11	29.96	25.00
12	32.46	27.50
13	34.96	30.00
14	37.46	32.50
15	39.96	35.00
16	42.46	37.50

Specifications/技术规格:

Current rating: 3A
额定电流: 3A

Voltage rating: 250V AC,DC
额定电压: 250V AC,DC

Insulation Resistance: 1000MΩ Min.
绝缘电阻: 最小1000MΩ

Withstanding voltage: 1000V AC 1Min
耐电压: 1000V AC 1分钟

Contact Resistance: 20mΩ Max.
接触电阻: 最大20mΩ

Operating Temperature:-25°C to +85°C
工作温度: -25℃ 到 85℃

Materials/材料:

Contact Material: Brass(Tin plating)
接触端子材料: 黄铜(镀锡)

Insulation Material: PA or PBT UL94V-0
绝缘体塑胶材质: PA 或 PBT UL94V-0

浙江快利电子有限公司
Zhejiang Kuaili Electronic Co., Ltd

REV.	UNIT.	SCALE.
A	MM	1:1

GENERAL TOLERANCE	
X.° ± 3°	X. --
.X° ± 2°	.X ±0.30
.XX° ± 1°	.XX ±0.20
.XXX° ± 0.5°	.XXX --

DESIGN: HELLER	DATE: 2020.09.30	DWG. NO.	TITLE.
CHECKED:	DATE:		XH/MS-NAD (高温料)
AUDITED:	DATE:	PART NO. KL-XH/MS-NAD-H01	
APPROVED:	DATE:		